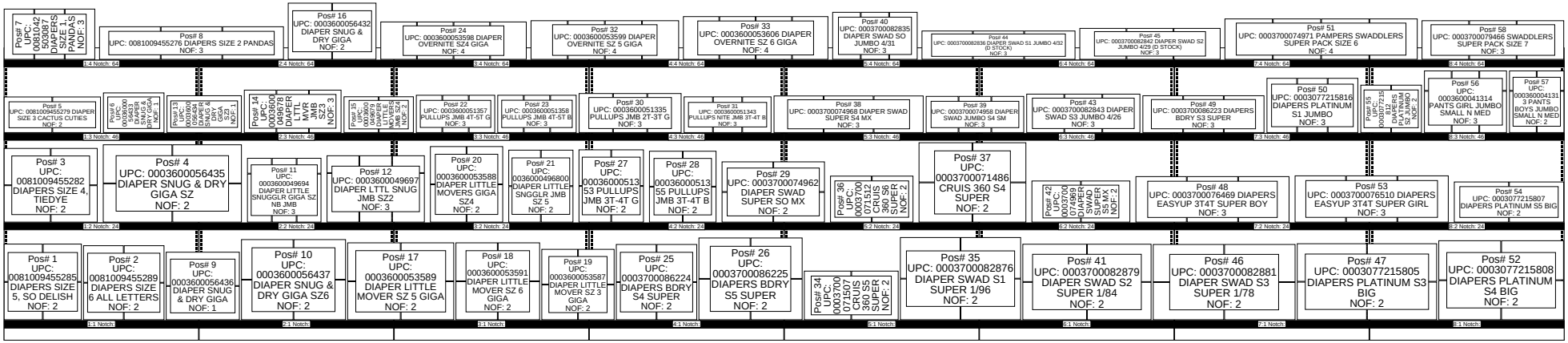
Pos# 7 UPC: 0081004287 DIAPERS SIZE 1, PANDAS NOF: 3
Pos# 8 UPC: 0081009455276 DIAPERS SIZE 2 PANDAS NOF: 3
Pos# 16 UPC: 0003600056432 DIAPER SNUG & DRY GIGA NOF: 2
Pos# 24 UPC: 0003600053598 DIAPER OVERNITE SZ4 GIGA NOF: 4
Pos# 32 UPC: 0003600053599 DIAPER OVERNITE SZ 5 GIGA NOF: 4
Pos# 33 UPC: 0003600053606 DIAPER OVERNITE SZ 6 GIGA NOF: 4
Pos# 40 UPC: 0003700082835 DIAPER SWAD SO JUMBO 4/31 NOF: 3
Pos# 44 UPC: 0003700082836 DIAPER SWAD S1 JUMBO 4/32 (D STOCK) NOF: 3
Pos# 45 UPC: 0003700082842 DIAPER SWAD S2 JUMBO 4/29 (D STOCK) NOF: 3
Pos# 51 UPC: 0003700074971 PAMPERS SWADDLERS SUPER PACK SIZE 6 NOF: 4
Pos# 58 UPC: 0003700079466 SWADDLERS SUPER PACK SIZE 7 NOF: 3
1-4 Notch: 64
2-4 Notch: 64
3-4 Notch: 64
4-4 Notch: 64
5-4 Notch: 64
6-4 Notch: 64
7-4 Notch: 64
8-4 Notch: 64
Pos# 5 UPC: 0081009455279 DIAPER SIZE 3 CACTUS CUTIES NOF: 2
Pos# 6 UPC: 0003600059403 SNUG & DRY GIGA NOF: 1
Pos# 13 UPC: 0003600059404 SNUG & DRY GIGA NOF: 1
Pos# 14 UPC: 0003600056438 DIAPER LTTL MVR JMB SZ3 NOF: 3
Pos# 15 UPC: 0003600056439 DIAPER LITTLE MOVERS JMB SZ4 NOF: 2
Pos# 22 UPC: 0003600051357 PULLUPS JMB 4T-5T G NOF: 3
Pos# 23 UPC: 0003600051358 PULLUPS JMB 4T-5T B NOF: 3
Pos# 30 UPC: 0003600051335 PULLUPS JMB 2T-3T G NOF: 3
Pos# 31 UPC: 0003600051343 PULLUPS NITE JMB 3T-4T B NOF: 3
Pos# 38 UPC: 0003700074968 DIAPER SWAD SUPER S4 MX NOF: 3
Pos# 39 UPC: 0003700074958 DIAPER SWAD JUMBO S4 SM NOF: 3
Pos# 43 UPC: 0003700082843 DIAPER SWAD S3 JUMBO 4/26 NOF: 3
Pos# 49 UPC: 0003700086223 DIAPERS BDRY S3 SUPER NOF: 3
Pos# 50 UPC: 0003077215816 DIAPERS PLATINUM S1 JUMBO NOF: 3
Pos# 55 UPC: 0003077215 DIAPERS PLATINUM S2 JUMBO NOF: 2
Pos# 56 UPC: 0003600041314 PANTS GIRL JUMBO SMALL N MED NOF: 3
Pos# 57 UPC: 0003600041313 PANTS BOYS JUMBO SMALL N MED NOF: 2
1-3 Notch: 46
2-3 Notch: 46
3-3 Notch: 46
4-3 Notch: 46
5-3 Notch: 46
6-3 Notch: 46
7-3 Notch: 46
8-3 Notch: 46
Pos# 3 UPC: 0081009455282 DIAPERS SIZE 4, TIEDYE NOF: 2
Pos# 4 UPC: 0003600056435 DIAPER SNUG & DRY GIGA SZ NOF: 2
Pos# 11 UPC: 0003600049694 DIAPER LITTLE SNUGGLR GIGA SZ NB JMB NOF: 3
Pos# 12 UPC: 0003600049697 DIAPER LTTL SNUG JMB SZ2 NOF: 3
Pos# 20 UPC: 0003600053588 DIAPER LITTLE MOVERS GIGA SZ4 NOF: 2
Pos# 21 UPC: 0003600496800 DIAPER LITTLE SNGGLR JMB SZ 5 NOF: 2
Pos# 27 UPC: 0003600051353 PULLUPS JMB 3T-4T G NOF: 2
Pos# 28 UPC: 0003600051355 PULLUPS JMB 3T-4T B NOF: 2
Pos# 29 UPC: 0003700074962 DIAPER SWAD SUPER SO MX NOF: 2
Pos# 36 UPC: 0003700071512 CRUIS 360 S5 SUPER NOF: 2
Pos# 37 UPC: 0003700071486 CRUIS 360 S4 SUPER NOF: 2
Pos# 42 UPC: 0003700074969 DIAPER SWAD SUPER S5 MX NOF: 2
Pos# 48 UPC: 0003700076469 DIAPERS EASYUP 3T4T SUPER BOY NOF: 3
Pos# 53 UPC: 0003700076510 DIAPERS EASYUP 3T4T SUPER GIRL NOF: 3
Pos# 54 UPC: 0003077215807 DIAPERS PLATINUM S5 BIG NOF: 2
1-2 Notch: 24
2-2 Notch: 24
3-2 Notch: 24
4-2 Notch: 24
5-2 Notch: 24
6-2 Notch: 24
7-2 Notch: 24
8-2 Notch: 24
Pos# 1 UPC: 0081009455285 DIAPERS SIZE 5, SO DELISH NOF: 2
Pos# 2 UPC: 0081009455289 DIAPERS SIZE 6 ALL LETTERS NOF: 2
Pos# 9 UPC: 0003600056436 DIAPER SNUG & DRY GIGA NOF: 1
Pos# 10 UPC: 0003600056437 DIAPER SNUG & DRY GIGA SZ6 NOF: 2
Pos# 17 UPC: 0003600053589 DIAPER LITTLE MOVER SZ 5 GIGA NOF: 2
Pos# 18 UPC: 0003600053591 DIAPER LITTLE MOVER SZ 6 GIGA NOF: 2
Pos# 19 UPC: 0003600053587 DIAPER LITTLE MOVER SZ 3 GIGA NOF: 2
Pos# 25 UPC: 0003700086224 DIAPERS BDRY S4 SUPER NOF: 2
Pos# 26 UPC: 0003700086225 DIAPERS BDRY S5 SUPER NOF: 2
Pos# 34 UPC: 0003700071507 CRUIS 360 S5 SUPER NOF: 2
Pos# 35 UPC: 0003700082876 DIAPER SWAD S1 SUPER 1/96 NOF: 2
Pos# 41 UPC: 0003700082879 DIAPER SWAD S2 SUPER 1/84 NOF: 2
Pos# 46 UPC: 0003700082881 DIAPER SWAD S3 SUPER 1/78 NOF: 2
Pos# 47 UPC: 0003077215805 DIAPERS PLATINUM S3 BIG NOF: 2
Pos# 52 UPC: 0003077215808 DIAPERS PLATINUM S4 BIG NOF: 2
1-1 Notch
2-1 Notch
3-1 Notch
4-1 Notch
5-1 Notch
6-1 Notch
7-1 Notch
8-1 Notch

Shelf	Bay	Loc ID	Notch	UPC	Brand	Description	Size	UOM	NOF	RSL	CS/PK	Cases	Packout	Height	Width	Depth
1																
1	1	1		0081009455285	HONEST	DIAPERS SIZE 5, SO DELISH	44.00	CT	2	K3	1	8	8	9.4	9.6	9.15
1	1	2		0081009455289	HONEST	DIAPERS SIZE 6 ALL LETTERS	40.00	CT	2	K3	1	8	8	9.2	10	9.1
1	2	9		0003600056436	HUGGIES	DIAPER SNUG & DRY GIGA	84.00	CT	1	K1	1	4	4	8.4	18.2	9.4
1	2	10		0003600056437	HUGGIES	DIAPER SNUG & DRY GIGA SZ6	66.00	CT	2	K1	1	8	8	9.95	12.9	9.65
1	3	17		0003600053589	HUGGIES	DIAPER LITTLE MOVER SZ 5 GIGA	58.00	CT	2	K1	1	8	8	9.55	13.15	9.3
1	3	18		0003600053591	HUGGIES	DIAPER LITTLE MOVER SZ 6 GIGA	50.00	CT	2	K1	1	8	8	9.55	10.4	9.3
1	3	19		0003600053587	HUGGIES	DIAPER LITTLE MOVER SZ 3 GIGA	76.00	CT	2	K1	1	4	4	8.75	9	15.75
1	4	25		0003700086224	PAMPERS	DIAPERS BDRY S4 SUPER	92.00	CT	2	K1	1	4	4	9.35	17.35	10
1	4	26		0003700086225	PAMPERS	DIAPERS BDRY S5 SUPER	78.00	CT	2	K1	1	8	8	10.15	12.8	10
1	5	34		0003700071507	PAMPERS	CRUIS 360 S5 SUPER	56.00	CT	2	K1	1	4	4	12.15	11.65	10
1	5	35		0003700082876	PAMPERS	DIAPER SWAD S1 SUPER 1/96	96.00	CT	2	K1	1	8	8	10.2	14.9	9.7
1	6	41		0003700082879	PAMPERS	DIAPER SWAD S2 SUPER 1/84	84.00	CT	2	K1	1	8	8	9.38	15.88	9.5
1	7	46		0003700082881	PAMPERS	DIAPER SWAD S3 SUPER 1/78	78.00	CT	2	K1	1	8	8	9.35	17.55	9.6
1	7	47		0003077215805	LUVS	DIAPERS PLATINUM S3 BIG	100.00	CT	2	K2	1	8	8	9.44	17.25	9.88
1	8	52		0003077215808	LUVS	DIAPERS PLATINUM S4 BIG	84.00	CT	2	K1	1	8	8	9.81	15.44	9.94
2																
2	1	3	24	0081009455282	HONEST	DIAPERS SIZE 4, TIEDYE	54.00	CT	2	K3	1	8	8	9.15	11.55	8.95
2	1	4	24	0003600056435	HUGGIES	DIAPER SNUG & DRY GIGA SZ	92.00	CT	2	K1	1	8	8	9.6	17.1	9.45
2	2	11	24	0003600049694	HUGGIES	DIAPER LITTLE SNUGGLR GIGA SZ NB	31.00	CT	3	K1	4	5.25	21	12	6.1	3.88
2	2	12	24	0003600049697	HUGGIES	DIAPER LTTL SNUG JMB SZ2	29.00	CT	3	K2	4	4.5	18	12.15	8.05	4.35
2	3	20	24	0003600053588	HUGGIES	DIAPER LITTLE MOVERS GIGA SZ4	66.00	CT	2	K1	1	4	4	9.38	9	14.5
2	3	21	24	0036000496800	HUGGIES	DIAPER LITTLE SNGGLR JMB SZ 5	19.00	CT	2	K2	4	5	20	8.94	8	4.25
2	4	27	24	0003600051353	HUGGIES	PULLUPS JMB 3T-4T G	20.00	CT	2	K2	4	4	16	8.98	8.03	4.92
2	4	28	24	0003600051355	HUGGIES	PULLUPS JMB 3T-4T B	20.00	CT	2	K1	4	5	20	8.81	8.29	4.73
2	4	29	24	0003700074962	PAMPERS	DIAPER SWAD SUPER SO MX	84.00	CT	2	K1	1	8	8	7.5	12.7	9.5
2	5	36	24	0003700071512	PAMPERS	CRUIS 360 S6 SUPER	48.00	CT	2	K1	1	4	4	11.5	10.25	9.25
2	5	37	24	0003700071486	PAMPERS	CRUIS 360 S4 SUPER	64.00	CT	2	K1	1	8	8	9.85	13.25	11.5
2	6	42	24	0003700074969	PAMPERS	DIAPER SWAD SUPER S5 MX	58.00	CT	2	K1	1	4	4	10.3	12.15	10
2	7	48	24	0003700076469	PAMPERS	DIAPERS EASYUP 3T4T SUPER BOY	66.00	CT	3	K1	1	6	6	11.38	12.63	10
2	8	53	24	0003700076510	PAMPERS	DIAPERS EASYUP 3T4T SUPER GIRL	66.00	CT	3	K1	1	6	6	11.56	12.63	9.81
2	8	54	24	0003077215807	LUVS	DIAPERS PLATINUM S5 BIG	72.00	CT	2	K1	1	4	4	10.06	13.56	10.06
3																
3	1	5	46	0081009455279	HONEST	DIAPER SIZE 3 CACTUS CUTIES	62.00	CT	2	K3	1	4	4	8.95	11.95	8.95
3	1	6	46	0003600056433	HUGGIES	DIAPER SNUG & DRY GIGA	116.00	CT	1	K1	1	2	2	9.95	15.1	9.2
3	2	13	46	0003600056434	HUGGIES	DIAPER SNUG & DRY GIGA SZ3	104.00	CT	1	K1	1	2	2	9.25	18.5	8.75
3	2	14	46	0003600049678	HUGGIES	DIAPER LTTL MVR JMB SZ3	25.00	CT	3	K2	4	3.75	15	10.63	8	4.25
3	2	15	46	0003600049679	HUGGIES	DIAPER LITTLE MOVERS JMB SZ4	22.00	CT	2	K3	4	2.5	10	9	8.63	4.25
3	3	22	46	0003600051357	HUGGIES	PULLUPS JMB 4T-5T G	17.00	CT	3	K1	4	3	12	9.37	6.5	4.92
3	3	23	46	0003600051358	HUGGIES	PULLUPS JMB 4T-5T B	17.00	CT	3	K1	4	3	12	9.37	6.5	4.92

Shelf	Bay	Loc ID	Notch	UPC	Brand	Description	Size	UOM	NOF	RSL	CS/PK	Cases	Packout	Height	Width	Depth
3	4	30	46	0003600051335	HUGGIES	PULLUPS JMB 2T-3T G	23.00	CT	3	K2	4	3	12	9.8	8.43	4.88
3	4	31	46	0003600051343	HUGGIES	PULLUPS NITE JMB 3T-4T B	18.00	CT	3	K1	4	3	12	8.98	7.2	4.84
3	5	38	46	0003700074968	PAMPERS	DIAPER SWAD SUPER S4 MX	66.00	CT	3	K1	1	6	6	9.2	12.3	9.7
3	5	39	46	0003700074958	PAMPERS	DIAPER SWAD JUMBO S4 SM	22.00	CT	3	K2	4	3.75	15	9.09	8.07	4.49
3	6	43	46	0003700082843	PAMPERS	DIAPER SWAD S3 JUMBO 4/26	26.00	CT	3	K2	4	3.75	15	9.65	9.35	4.7
3	7	49	46	0003700086223	PAMPERS	DIAPERS BDRY S3 SUPER	104.00	CT	3	K1	1	3	3	9.25	17.4	10
3	7	50	46	0003077215816	LUVS	DIAPERS PLATINUM S1 JUMBO	46.00	CT	3	K3	2	7.5	15	13.54	7.52	4.41
3	8	55	46	0003077215812	LUVS	DIAPERS PLATINUM S2 JUMBO	38.00	CT	2	K3	2	5	10	7.56	11.85	4.41
3	8	56	46	0003600041314	GOODNITES	PANTS GIRL JUMBO SMALL N MED	14.00	CT	3	K2	4	3.75	15	10.35	6.8	5
3	8	57	46	0003600041313	GOODNITES	PANTS BOYS JUMBO SMALL N MED	14.00	CT	2	K1	4	2.5	10	10.35	6.8	5
4																
4	1	7	64	0081042503087	HONEST	DIAPERS SIZE 1, PANDAS	35.00	CT	3	K3	4	3.75	15	12.55	7.5	4
4	1	8	64	0081009455276	HONEST	DIAPERS SIZE 2 PANDAS	72.00	CT	3	K3	1	6	6	8.2	15.15	8.8
4	2	16	64	0003600056432	HUGGIES	DIAPER SNUG & DRY GIGA	128.00	CT	2	K1	1	4	4	14	10.9	9.2
4	3	24	64	0003600053598	HUGGIES	DIAPER OVERNITE SZ4 GIGA	58.00	CT	4	K2	1	4	4	9.38	9	12.88
4	4	32	64	0003600053599	HUGGIES	DIAPER OVERNITE SZ 5 GIGA	50.00	CT	4	K1	1	8	8	9.69	9.13	11
4	4	33	64	0003600053606	HUGGIES	DIAPER OVERNITE SZ 6 GIGA	42.00	CT	4	K1	1	8	8	10.7	8.94	9.94
4	5	40	64	0003700082835	PAMPERS	DIAPER SWAD SO JUMBO 4/31	31.00	CT	3	K2	4	3.75	15	11.75	7	4
4	6	44	64	0003700082836	PAMPERS	DIAPER SWAD S1 JUMBO 4/32 (D STOC	32.00	CT	3	K2	4	3	12	7.16	12.62	4.56
4	6	45	64	0003700082842	PAMPERS	DIAPER SWAD S2 JUMBO 4/29 (D STOC	29.00	CT	3	K3	4	3	12	7.8	11.58	4.45
4	7	51	64	0003700074971	PAMPERS	PAMPERS SWADDLERS SUPER PACK	50.00	CT	4	K1	1	8	8	10.13	11.88	9.88
4	8	58	64	0003700079466	PAMPERS	SWADDLERS SUPER PACK SIZE 7	44.00	CT	3	K1	1	6	6	9.69	11.69	10

ADDED PRODUCT

Barcode	UPC	Brand	Description	Position #	Status	RSL

DELETED PRODUCT

Barcode	UPC	Brand	Description	Status	RSL